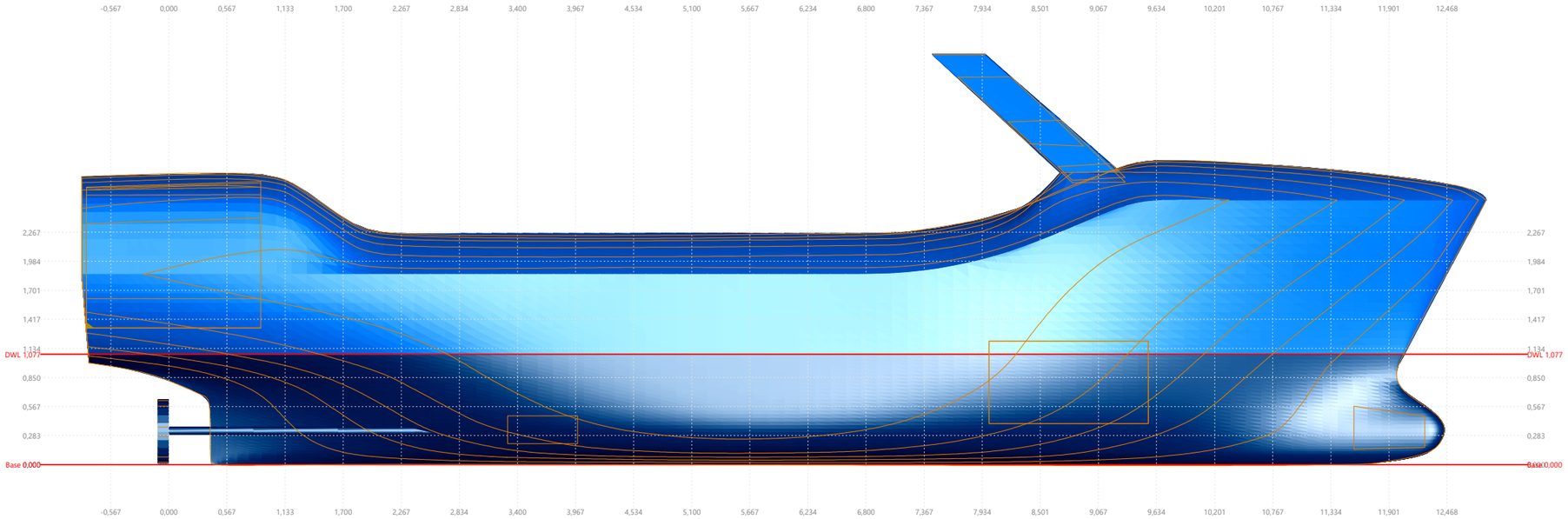
-0,567 0,000 0,567 1,133 1,700 2,267 2,834 3,400 3,967 4,534 5,100 5,667 6,234 6,800 7,367 7,934 8,501 9,067 9,634 10,201 10,767 11,334 11,901 12,468
2,267 1,984 1,701 1,417 1,134 0,850 0,567 0,283 0,000
DWL 1,077
Base 0,000

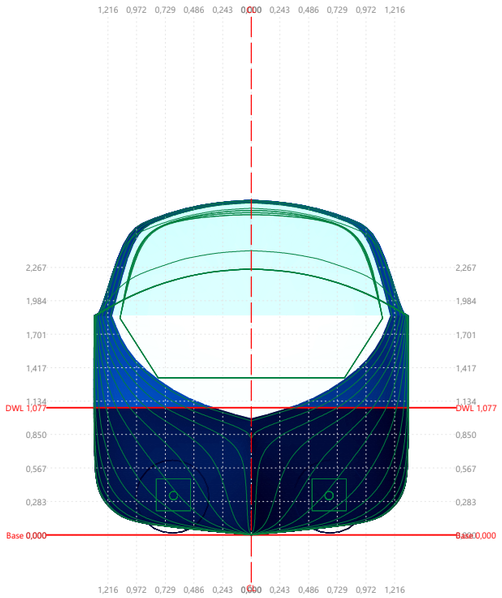
1,216 0,972 0,729 0,486 0,243 0,000 0,243 0,486 0,729 0,972 1,216
2,267 1,984 1,701 1,417 1,134 0,850 0,567 0,283 0,000
DWL 1,077
Base 0,000

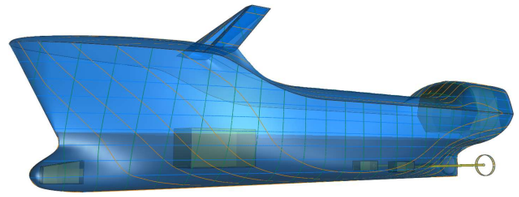

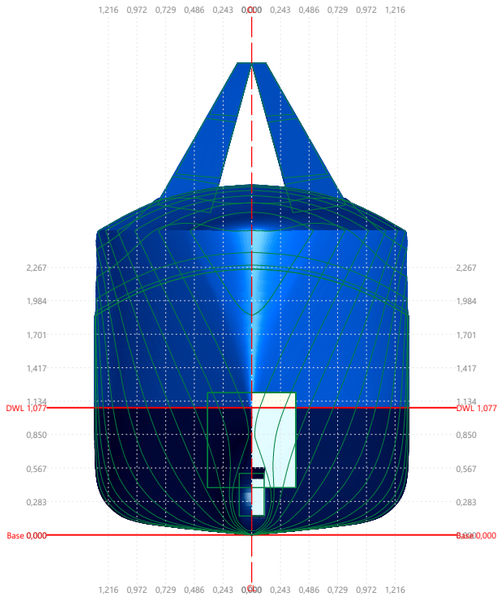
1,216 0,972 0,729 0,486 0,243 0,000 0,243 0,486 0,729 0,972 1,216
2,267 1,984 1,701 1,417 1,134 0,850 0,567 0,283 0,000
DWL 1,077
Base 0,000

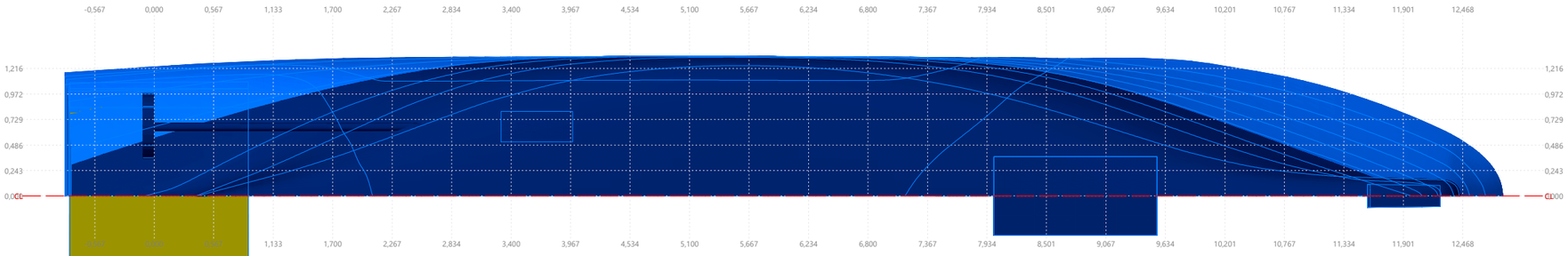
-0,567 0,000 0,567 1,133 1,700 2,267 2,834 3,400 3,967 4,534 5,100 5,667 6,234 6,800 7,367 7,934 8,501 9,067 9,634 10,201 10,767 11,334 11,901 12,468
1,216 0,972 0,729 0,486 0,243 0,000